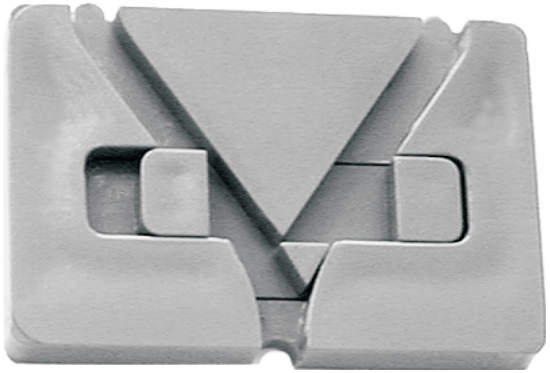

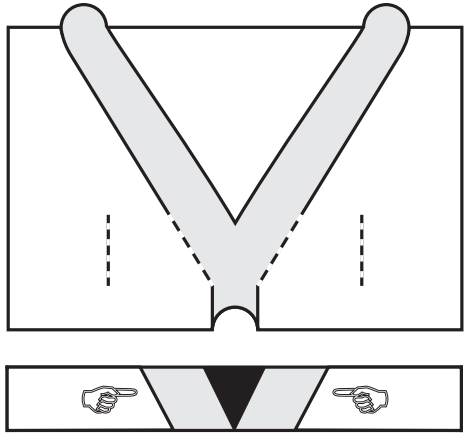

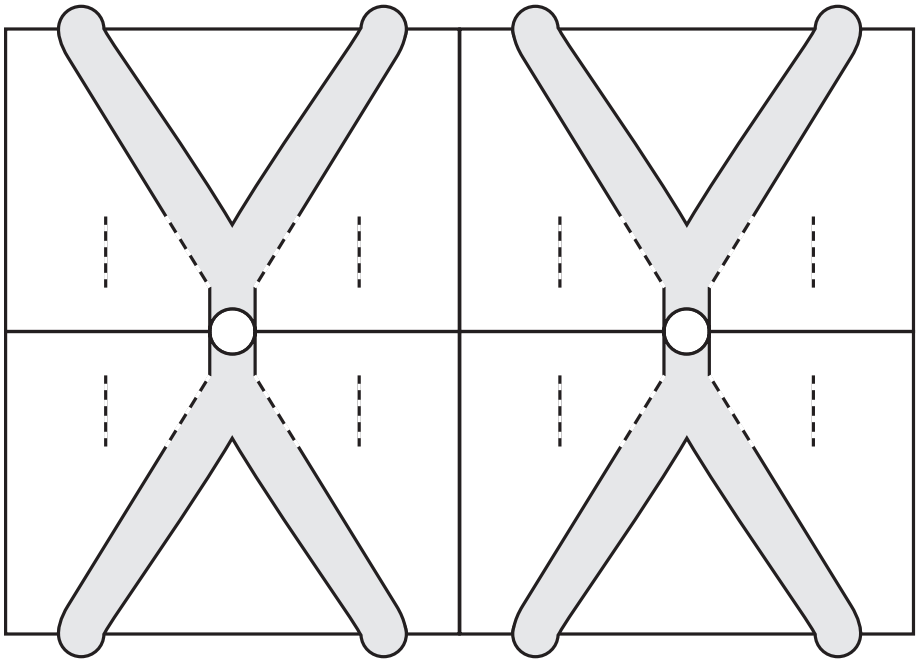

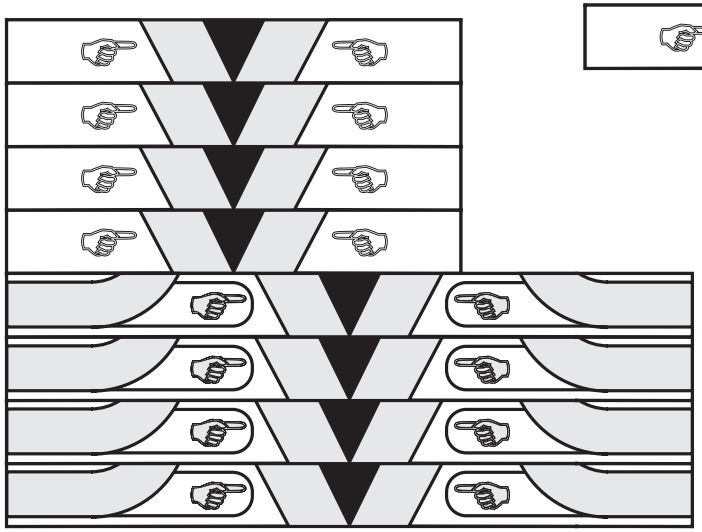

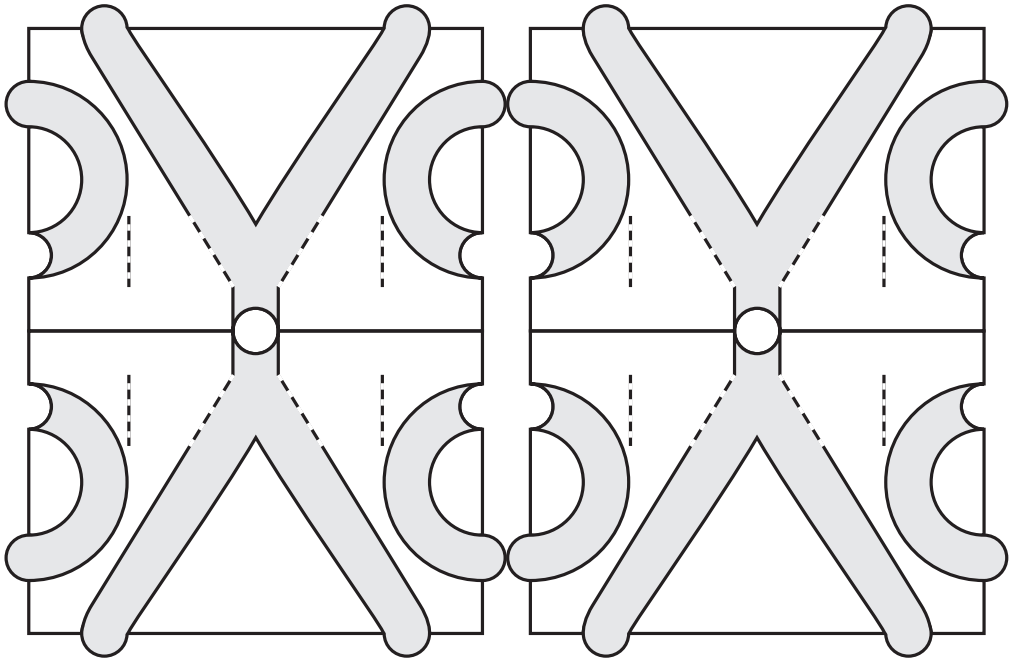

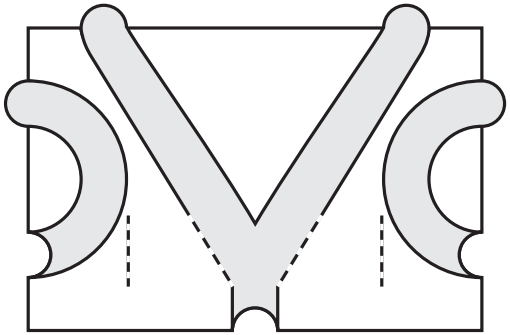

© Inge Schwank, Institute for Cognitive Mathematics, Dept. Mathematics & Computer Science, University of Osnabrueck, Germany